FIGURE 1.

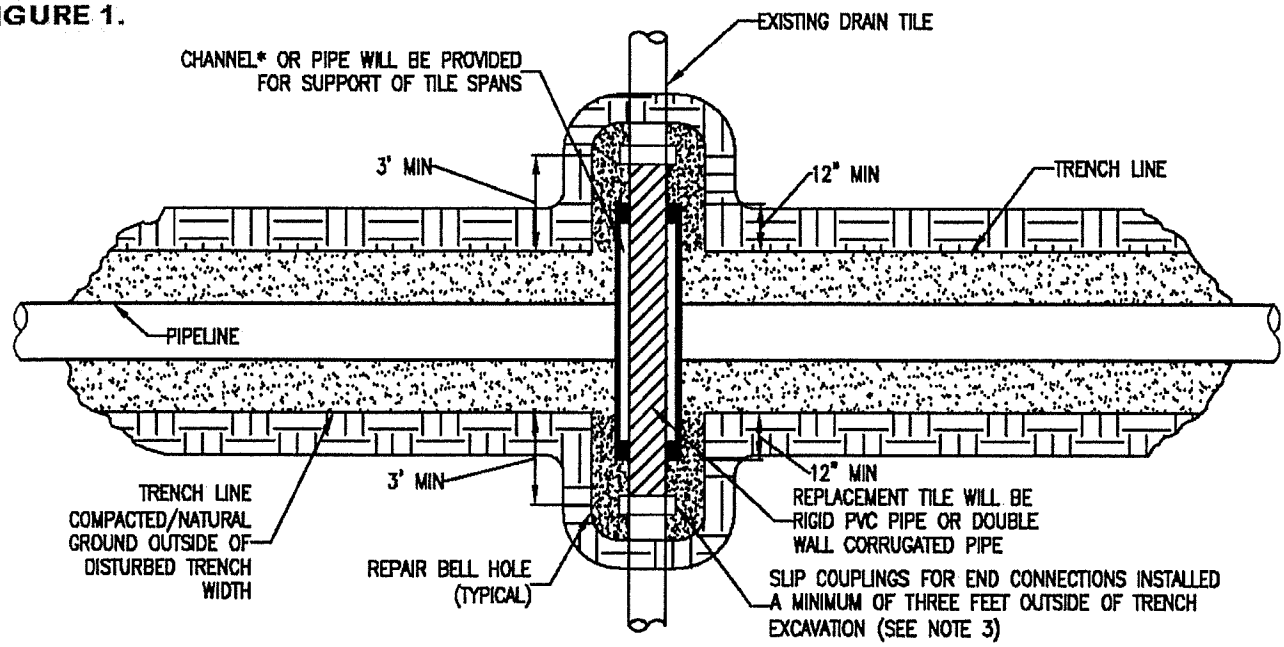

PLAN
N.T.S.

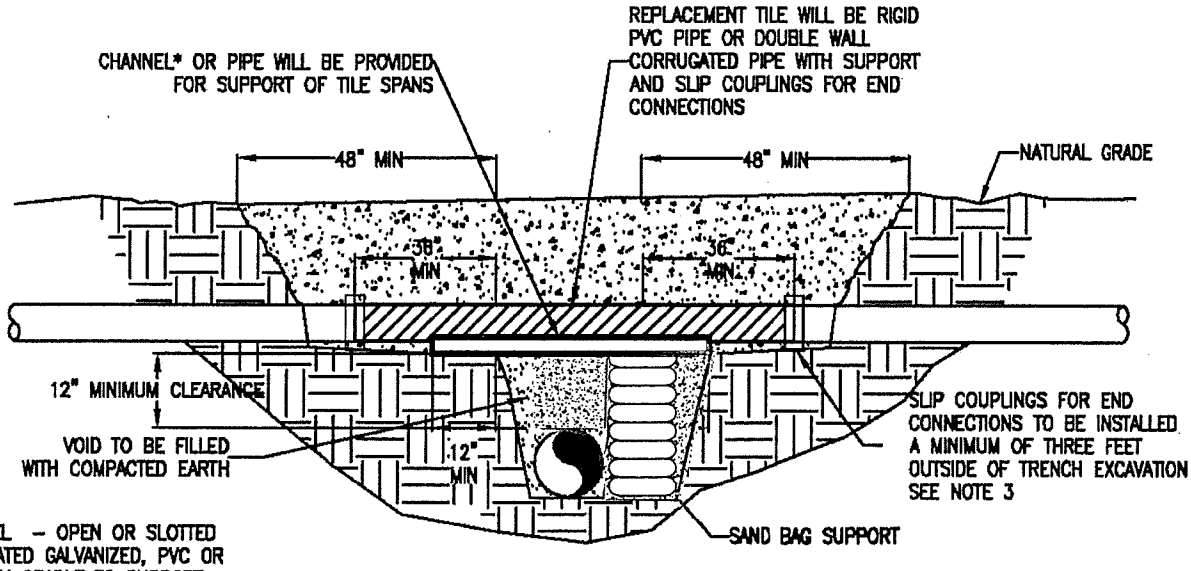

*CHANNEL – OPEN OR SLOTTED CORRUGATED GALVANIZED, PVC OR ALUMINUM CRADLE TO SUPPORT DRAIN TILE.

CROSS SECTION
N.T.S.

NOTE:

1. IMMEDIATELY REPAIR TILE IF WATER IS FLOWING THROUGH TILE AT TIME OF TRENCHING. IF NO WATER IS FLOWING AND TEMPORARY REPAIR IS DELAYED, OR NOT MADE BY THE END OF THE WORK DAY, A SCREEN OR APPROPRIATE 'NIGHT CAP' SHALL BE PLACED ON OPEN ENDS OF TILE TO PREVENT ENTRAPMENT OF ANIMALS ETC.
2. CHANNEL OR PIPE (OPEN OR SLOTTED) MADE OF CORRUGATED GALVANIZED PIPE, PVC OR ALUMINUM WILL BE USED FOR SUPPORT OF DRAIN TILE SPANS.
3. INDUSTRY STANDARDS SHALL BE FOLLOWED TO ENSURE PROPER SEAL OF REPAIRED DRAIN TILES.

TEMPORARY DRAIN TILE REPAIR

FIGURE 2.

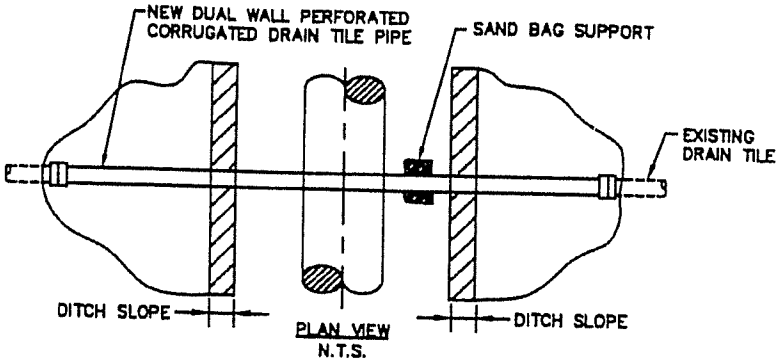

PLAN VIEW

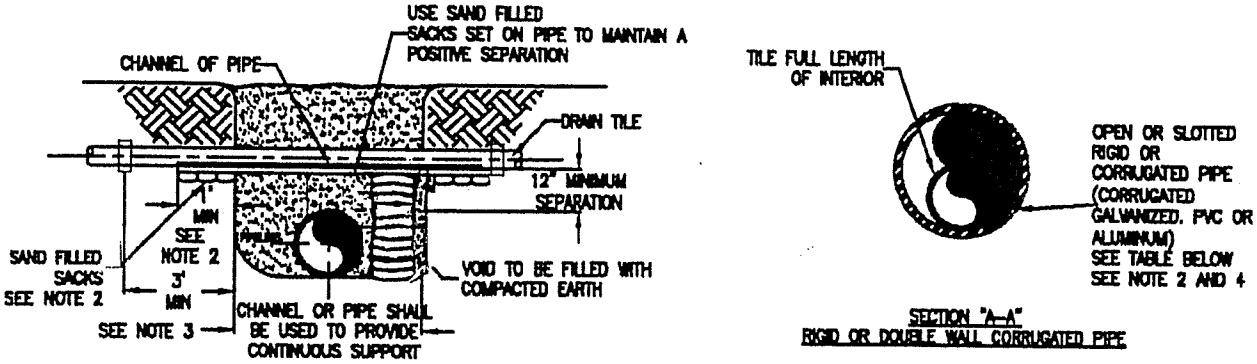

END VIEWS

MINIMUM SUPPORT TABLE				
TILE SIZE	CHANNEL SIZE		PIPE SIZE	
3"	4" @ 5.4	#/ft	4"	STD. WT.
4"-5"	5" @ 6.7	#/ft	6"	STD. WT.
8"-9"	7" @ 9.8	#/ft	9"-10"	STD. WT.
10"	10" @ 15.3	#/ft	12"	STD. WT.

NOTE:

1. TILE REPAIR AND REPLACEMENT SHALL MAINTAIN ORIGINAL ALIGNMENT GRADIENT AND WATER FLOW TO THE GREATEST EXTENT POSSIBLE. IF THE TILE NEEDS TO BE RELOCATED, THE INSTALLATION ANGLE MAY VARY DUE TO SITE SPECIFIC CONDITIONS AND LANDOWNER RECOMMENDATIONS.

2. 1'-0" MINIMUM LENGTH OF CHANNEL OR RIGID PIPE (OPEN OR SLOTTED CORRUGATED GALVANIZED, PVC OR ALUMINUM CRADLE) SHALL BE SUPPORTED BY UNDISTURBED SOIL, OR IF CROSSING IS NOT AT RIGHT ANGLES TO PIPELINE, EQUIVALENT LENGTH PERPENDICULAR TO TRENCH. SHIM WITH SAND BAGS TO UNDISTURBED SOIL FOR SUPPORT AND DRAINAGE GRADIENT MAINTENANCE (TYPICAL BOTH SIDES).

3. DRAIN TILES WILL BE PERMANENTLY CONNECTED TO EXISTING DRAIN TILES A MINIMUM OF THREE FEET OUTSIDE OF EXCAVATED TRENCH LINE USING INDUSTRY STANDARDS TO ENSURE PROPER SEAL OF REPAIRED DRAIN TILES INCLUDING SLIP COUPLINGS.

4. DIAMETER OF RIGID PIPE SHALL BE OF ADEQUATE SIZE TO ALLOW FOR THE INSTALLATION OF THE TILE FOR THE FULL LENGTH OF THE RIGID PIPE.

5. OTHER METHODS OF SUPPORTING DRAIN TILE MAY BE USED IF ALTERNATE PROPOSED IS EQUIVALENT IN STRENGTH TO THE CHANNEL/PIPE SECTIONS SHOWN AND IF APPROVED BY COMPANY REPRESENTATIVES AND LANDOWNER IN ADVANCE. SITE SPECIFIC ALTERNATE SUPPORT SYSTEM TO BE DEVELOPED BY COMPANY REPRESENTATIVES AND FURNISHED TO CONTRACTOR FOR SPANS IN EXCESS OF 20', TILE GREATER THEN 10" DIAMETER, AND FOR "HEADER" SYSTEMS.

6. ALL MATERIAL TO BE FURNISHED BY CONTRACTOR.

7. PRIOR TO REPAIRING TILE, CONTRACTOR SHALL PROBE LATERALLY INTO THE EXISTING TILE TO FULL WIDTH OF THE RIGHTS OF WAY TO DETERMINE IF ADDITIONAL DAMAGE HAS OCCURRED. ALL DAMAGED/DISTURBED TILE SHALL BE REPAIRED AS NEAR AS PRACTICABLE TO ITS ORIGINAL OR BETTER CONDITION.

PERMANENT DRAIN TILE REPAIR