PIPELINE CONSTRUCTION STANDARDS AND POLICIES
Recommended by the
ILLINOIS DEPARTMENT OF AGRICULTURE

The following pipeline construction standards and policies are recommended by the Illinois Department of Agriculture (IDOA) to help preserve the integrity of any agricultural land that is impacted by pipeline construction. They were developed with the cooperation of agricultural agencies, organizations, landowners, tenants, drainage contractors, and pipeline companies.

The below prescribed construction standards and policies are applicable to construction activities occurring partially or wholly on privately owned agricultural land. With the exception of Item No. 3, they are not intended to apply to construction activities occurring entirely on public right-of-way, railroad right-of-way, publicly owned land, or privately owned land that is not agricultural land.

Conditions

The mitigative actions specified in the construction standards and policies set forth below will be implemented in accordance with the conditions listed below:

A. All mitigative actions are subject to modification through negotiation by landowners and a representative of the Company, provided such changes are negotiated in advance of any construction, maintenance, or repairs.

B. The Company may negotiate with landowners to carry out the mitigative actions that landowners wish to perform themselves.

C. All mitigative actions employed by the Company, unless otherwise specified in these construction standards and policies or in an easement negotiated with an individual landowner, will be implemented within 45 days of completion of the pipeline facilities on any affected property, weather and landowner permitting. Temporary repairs will be made by the Company during the construction process as needed to minimize the risk of additional property damage that may result from an extended construction time period. If weather delays the completion of any mitigative action beyond the 45 day period, the Company will provide the affected landowner(s) with a written estimate of the time needed for completion of the mitigative action.

D. All mitigative actions will extend to associated future construction, maintenance, and repairs by the Company.

E. Every effort will be made by the Company to determine all affected tenants along the route of the pipeline. The Company will endeavor to keep the tenants informed of the project's status, meetings, and other factors that may have an impact upon their farming operations.

F. The Company agrees to include a statement its adherence to the construction standards and policies in any environmental assessment and/or environmental impact statement that may be prepared on the project.

G. The Company will implement all mitigative actions to the extent that they do not conflict with the requirements of any applicable federal, state and local rules and regulations and other permits and approvals that are obtained by the Company for the project.

H. If any mitigative action(s) is held to be unenforceable, no other provision shall be affected by that holding, and the remainder of the mitigative actions shall be interpreted as if they did not contain the unenforceable provision.

Definitions

Agricultural land - Land used for cropland, hayland, pasture land, managed woodlands, truck gardens, farmsteads, commercial ag-related facilities, feedlots, livestock confinement systems, land on which farm buildings are located, and land in government set-aside programs.

Company - Pipeline company, utility company, and any contractor or sub-contractor in the employ of the Company for the purpose of completing the pipeline or any mitigative actions contained herein.

Cropland - Land used for growing row crops, small grains, or hay; includes land which was formerly used as cropland, but is currently in a government set-aside program and pastureland comprised of prime farmland.

Pipeline - Includes the pipeline and its related appurtenances.

Landowner - Person(s) holding legal title to property on the pipeline route from whom the Company is seeking, or has obtained, a temporary or permanent easement, or any person(s) legally authorized by a landowner to make decisions regarding the mitigation or restoration of agricultural impacts to such landowner's property.

Prime farmland - Agricultural land comprised of soils that are defined by the USDA Natural Resources Conservation Service as being "prime" soils (generally considered the most productive soils with the least input of nutrients and management).

Right-of-way - Includes the permanent and temporary easements that the Company acquires for the purpose of constructing and operating the pipeline.

Topsoil - The uppermost layer of the soil that has the darkest color or the highest content of organic matter, more specifically defined as the "A" horizon.

Construction Standards and Policies

1. Pipeline depth

A. Except for aboveground piping facilities, such as mainline block valves, tap valves, meter stations, etc., the pipeline will be buried with:

1. a minimum of 5 feet of top cover where it crosses cropland.
2. a minimum of 5 feet of topcover where it crosses pasture land or other agricultural land comprised of soils that are classified by the USDA as being prime soils.
3. a minimum of 3 feet of top cover where it crosses pasture land and other agricultural land not comprised of prime soils.
4. a minimum of 3 feet of top cover where it crosses wooded/brushy land.
5. substantially the same topcover as an existing parallel pipeline, but not less than 5 feet, where the route parallels an existing pipeline within a 100 foot perpendicular offset.

B. Notwithstanding the foregoing, in those areas where (i) rock in its natural formation and/or (ii) a continuous strata of gravel exceeding 200 feet in length are encountered, the minimum top cover will be 30 inches.

C. When the pipeline requires weights to keep it from floating, the pipeline will be buried deep enough to maintain the depth of topcover above the weights as specified in 1.A. above.

D. On agricultural land subject to erosion, the Company will patrol the pipeline right-of-way with reasonable frequency to detect areas of erosion of the top cover. In no instance will the Company knowingly allow the amount of top cover to be less than 36 inches as a result of natural erosion, except as stated in 1.B. above.

2. Topsoil Replacement

A. The topsoil depth shall be determined by a properly qualified soil scientist or soil technician who will set stakes or flags every 200 feet along the right-of-way identifying the depth of topsoil to be removed.

B. The actual depth of the topsoil, not to exceed 36 inches, will first be stripped from the area to be excavated above the pipeline and from the adjacent subsoil storage area. The topsoil will be stored in a windrow parallel to the pipeline trench in such a manner that it will not become intermixed with subsoil materials.

C. All subsoil material that is removed from the trench will be placed in a second windrow parallel to the pipeline trench that is separate from the topsoil windrow.

D. In backfilling the trench, the stockpiled subsoil material will be placed back into the trench before replacing the topsoil.

E. Refer to Items No. 5.A. and 5.B. for procedures pertaining to rock removal from the subsoil and topsoil.

F. Refer to Items No. 7.A. through 7.C. for procedures pertaining to the alleviation of compaction of the topsoil.

G. The topsoil must be replaced so that after settling occurs, the topsoil's original depth and contour (with an allowance for settling) will be restored. The same shall apply where excavations are made for road, stream, drainage ditch, or other crossings. In no instance will the topsoil materials be used for any other purpose.

3. Repair of Damaged Tile Lines

If underground drainage tile is damaged by the pipeline's construction, it will be repaired in a manner that assures the tile line's proper operation at the point of repair. The following standards and policies shall apply to the tile line repair:

A. The Company will endeavor to locate all tile lines within the right-of-way prior to the pipeline's installation so repairs can be made if necessary. The Company will contact affected landowners/tenants for their knowledge of tile line locations prior to the pipeline's installation. All identified tile lines will be staked or flagged prior to construction to alert construction crews to the possible need for tile line repairs.

B. All tile lines that are damaged, cut, or removed shall be staked or flagged with the stakes or flags placed in such a manner they will remain visible until the permanent repairs are completed.

C. If water is flowing through any damaged tile line, the tile line will be immediately and temporarily repaired until such time that permanent repairs can be made. If the tile lines are dry and water is not flowing, temporary repairs are not required if the permanent repairs can be made within 14 days of the time damage occurred; however, the exposed tile lines will be screened or otherwise protected to prevent the entry of foreign materials, small mammals, etc. into the tile lines.

D. Where tile lines are severed by the pipeline trench, repairs shall be made using the **IDOA Tile Line Repair Drawings, Temporary and Permanent, 2012** (see Figures 1 and 2).

E. There will be a minimum of one foot of separation between the tile line and the pipeline whether the pipeline passes over or under the tile line.

F. The original tile line alignment and gradient shall be maintained. A laser transit shall be used to ensure the proper gradient is maintained. A laser operated tiling machine shall be used to install or replace tiling segments of 100 linear feet or more.

G. Before completing permanent tile repairs, all tile lines will be probed or examined by other suitable means on both sides of the trench for their entire length within any work areas to check for tile that might have been damaged by vehicular traffic or construction equipment. If tile lines are found to be damaged, they must

be repaired so they operate as well after construction as before the construction began.

H. All permanent tile line repairs must be made within 14 days of the pipeline being laid in the trench on the landowner's property, weather and soil conditions permitting.

I. Following completion of the pipeline, the Company will be responsible for correcting all tile line repairs that fail due to pipeline construction, provided those repairs were made by the Company. The Company will not be responsible for tile line repairs that the Company pays the landowner to perform.

4. Installation of Additional Tile Lines

A. The Company shall be responsible for installing such additional drainage tile and other drainage measures as are necessary to properly drain wet areas on the permanent and temporary easements caused by the construction and/or existence of the pipeline.

B. Where the pipeline's route parallels an existing pipeline within a 200-foot perpendicular offset, the Company shall be responsible for installing tile and/or other drainage measures, as necessary, to properly drain the area between the two pipelines to the extent the wet areas between the pipelines are caused by the construction and/or existence of the pipeline.

C. It is presumed that any wet areas located in permanent and temporary easements and/or between the two parallel pipelines are caused by the construction and/or existence of the new pipeline unless the Company can prove that the construction and/or existence of the new pipeline is not the cause of the wet areas.

5. Rock Removal

The following rock removal procedures only pertain to rocks found in the uppermost 42 inches of soil, the common freeze zone in Illinois.

A. Before replacing any topsoil, all rocks greater than 3 inches in any dimension will be removed from the surface of all exposed subsoil and from all subsoil that is replaced back in the trench.

B. As the topsoil is replaced, all rocks greater than 3 inches in any dimension will be removed from the topsoil.

C. If trenching, blasting, or boring operations are required through rocky terrain, suitable precautions will be taken to minimize the potential for oversized rocks to become interspersed with adjacent soil material.

D. Rocks and soil containing rocks removed from the subsoil areas, topsoil, or from any excavations, will be hauled off the landowner's premises or disposed of on the landowner's premises at a location that is mutually acceptable to the landowner and the Company.

6. Removal of Construction Debris

All construction-related debris and material that are not an integral part of the pipeline will be removed from the landowner's property. Such material to be removed would include litter generated by the construction crews.

7. Compaction, Rutting, Fertilization, Liming

A. After the topsoil has been replaced, all areas that were traversed by vehicles and construction equipment will be ripped at least 18 inches deep and all pasture and woodland will be ripped at least 12 inches deep. The existence of tile lines or underground utilities may necessitate less depth. The entire right-of-way will then be disked.

B. Three passes will be made across any agricultural land that is ripped.

C. All ripping and disking will be done at a time when the soil is dry enough for normal tillage operations to occur on undisturbed farmland adjacent to the areas to be ripped.

D. The Company will restore all rutted land to its original condition.

E. The cost of applying fertilizer, manure, and/or lime will be included in the damages paid to the landowner, thereby allowing the landowner to apply the appropriate type and amounts of fertilizer, manure, and/or lime as needed depending on the crops contemplated and the construction schedule.

F. If there is any dispute between the landowner and the Company as to what areas need to be ripped, the depth at which compacted areas should be ripped, or the necessity or rates of lime and fertilizer application, the appropriate county Soil and Water Conservation District's opinion shall be considered by the Company and the landowner.

8. Land Leveling

A. Following the completion of the pipeline, the Company will restore any right-of-way to its original pre-construction elevation and contour should uneven settling occur or surface drainage problems develop as a result of pipeline construction.

B. The Company will provide the landowners with a telephone number and address that may be used to alert the Company of the need to perform additional land leveling services.

C. If, in the future, uneven settling occurs or surface drainage problems develop as a result of the pipeline construction, the Company will provide such land leveling services within 45 days of a landowner's written notice, weather and soil conditions permitting.

D. If there is any dispute between the landowner and the Company as to what areas need additional land leveling beyond that which is done at the time of construction, it shall be the Company’s responsibility to disprove the landowner’s claim that additional land leveling is warranted.

9. Prevention of Soil Erosion

A. The Company will work with landowners to prevent excessive erosion on right-of-way that has been disturbed by construction. Reasonable methods will be implemented to control erosion. This is not a requirement, however, if the land across which the pipeline is constructed is bare cropland that the landowner intends to leave bare until the next crop is planted.

B. If the landowner and Company cannot agree upon a reasonable method to control erosion on the landowner's right-of-way, the recommendations of the appropriate county Soil and Water Conservation District shall be considered by the Company and the landowner.

10. Repair of Damaged Soil Conservation Practices

All soil conservation practices (such as terraces, grassed waterways, etc.), which are damaged by the pipeline's construction, will be restored to their pre-construction condition.

11. Damages to Private Property

A. The Company will reasonably compensate landowners for any construction-related damages caused by the Company that occur on or off of the established pipeline right-of-way.

B. Compensation for damages to private property caused by the Company shall extend beyond the initial construction of the pipeline, to include those damages caused by the Company during future construction, operation, maintenance, and repairs relating to the pipeline.

12. Clearing of Trees and Brush from the Easement

A. If trees are to be removed from the right-of-way, the Company will consult with the landowner to determine if there are trees of commercial or other value to the landowner.

B. If there are trees of commercial or other value to the landowner, the Company will allow the landowner the right to retain ownership of the trees with the disposition of the trees to be negotiated prior to the commencement of land clearing.

C. Unless otherwise restricted by federal, state or local regulations, the Company will follow the landowner's desires regarding the removal and disposal of trees, brush, and stumps of no value to the landowner by burning, burial, etc., or complete removal from any affected property.

13. Interference with Irrigation Systems

A. If the pipeline and/or temporary work areas intersect an operational (or soon to be operational) spray irrigation system, the Company will establish with the landowner an acceptable amount of time the irrigation system may be out of service.

B. If, as a result of pipeline construction activities, an irrigation system interruption results in crop damages, either on the pipeline right-of-way or off the right-of-way, the landowner will be reasonably compensated for all such crop damages.

C. If it is feasible and mutually acceptable to the Company and the landowner, temporary measures will be implemented to allow an irrigation system to continue to operate across land on which the pipeline is also being constructed.

14. Ingress and Egress Routes

Prior to the pipeline's installation, the Company and the landowner will reach a mutually acceptable agreement on the route that will be utilized for entering and leaving the pipeline right-of-way should access to the right-of-way not be practical or feasible from adjacent segments of the pipeline right-of-way or from public highway or railroad right-of-way.

15. Temporary Roads

A. The location of temporary roads to be used for construction purposes will be negotiated with the landowner.

B. The temporary roads will be designed to not impede surface drainage and will be built to minimize soil erosion on or near the temporary roads.

C. Upon abandonment, temporary roads may be left intact through mutual agreement of the landowner and the Company unless otherwise restricted by federal, state, or local regulations.

D. If the temporary roads are to be removed, the rights-of-way upon which the temporary roads are constructed will be returned to their previous use(s) and restored to equivalent condition(s) as existed prior to their construction. All temporary access roads that are removed shall be ripped to a depth of 18 inches. All ripping will be done consistent with Items 7.A. through 7.C.

16. Weed Control

A. On any right-of-way over which the Company has jurisdiction as to its surface use, (i.e., valve sites, metering stations, compression stations, etc.), the Company will provide for weed control in a manner that prevents the spread of weeds onto adjacent lands used for agricultural purposes. Spraying will be done by a pesticide applicator who is appropriately licensed for doing such work in the state of Illinois.

B. The Company will be responsible for reimbursing all reasonable costs incurred by owners of land adjacent to surface facilities when the landowners must control weeds on their land which can be determined to have spread from land accommodating pipeline surface facilities, should the Company fail to do so after being given written notice and a 45-day opportunity to respond.

17. Pumping of Water from Open Trenches

A. In the event it becomes necessary to pump water from open trenches, the Company will pump the water in a manner that will avoid damaging adjacent agricultural land, crops, and/or pasture. Such damages include, but are not limited to: inundation of crops for more than 24 hours, deposition of sediment in ditches and other water courses, and the deposition of subsoil sediment and gravel in fields and pastures.

B. If it is impossible to avoid water-related damages as described in Item 17.A. above, the Company will reasonably compensate the landowners for the damages or will correct the damages so as to restore the land, crops, pasture, water courses, etc. to their pre-construction condition.

C. All pumping of water shall comply with existing drainage laws, local ordinances relating to such activities, and provisions of the Clean Water Act.

18. Aboveground Facilities

Locations for aboveground facilities shall be selected in a manner so as to be as unobtrusive as reasonably possible to ongoing agricultural activities occurring on the land adjacent to the facilities. First priority shall be made to locating aboveground facilities on right-of-way that is not used as cropland. If this is not feasible, such facilities shall be located so as to incur the least hindrance to the adjacent cropping operations (i.e., located in field corners or areas where at least one side is not used for cropping purposes).

19. Advance Notice of Access to Private Property

A. The Company will provide the landowner or tenant with a minimum of 24 hours prior notice before accessing his/her property for the purpose of constructing the pipeline.

B. Prior notice shall first consist of a personal contact or a telephone contact, whereby the landowner or tenant is informed of the Company's intent to access the land. If the landowner or tenant cannot be reached in person or by telephone, the Company will mail or hand deliver to the landowner or tenant's home a dated, written notice of the Company's intent. The landowner or tenant need not acknowledge receipt of the written notice before the Company can enter the landowner's property.

20. Reporting of Inferior Agricultural Impact Mitigation Work

No later than 45 days prior to the commencement of the pipeline construction across a landowner’s property, the Company will provide the landowner with a toll-free number the landowner can call to alert the Company should the landowners observe inferior agricultural impact mitigation work which is being done or has been carried out on his/her property.

21. Indemnification

The Company will indemnify all owners of agricultural land upon which such pipeline is installed, their heirs, successors, legal representatives, and assigns from and against all claims, injuries, suits, damages, costs, losses, and reasonable expenses resulting from or arising out of the laying, maintenance, removal, repair, use or existence of such pipeline, whether heretofore or hereafter laid, including damage to such pipeline or any of its appurtenances and the leaking of its contents, except where claims, injuries, suits, damages, costs, losses, and expenses are caused by the negligence or intentional acts, or willful omissions of such owners, their heirs, successors, legal representatives, and assigns.

IDOA Pipeline Standards & Policies.docx
12-15-09

FIGURE 1.

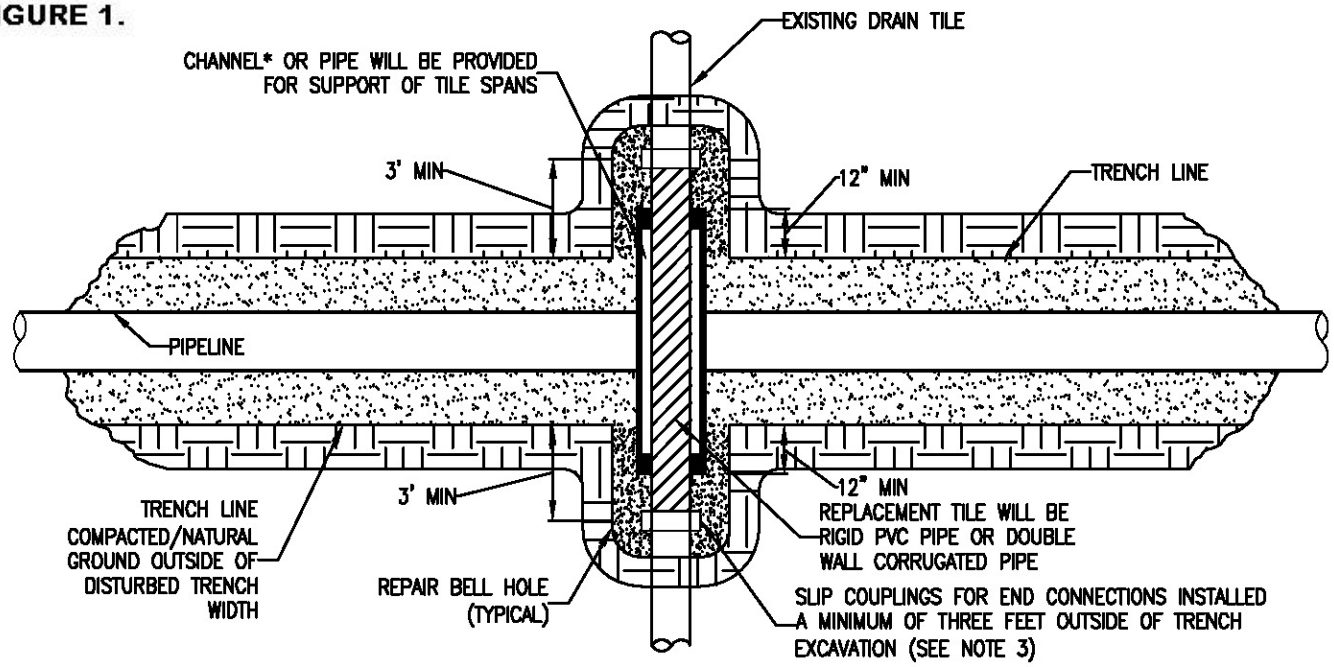

PLAN
N.T.S.

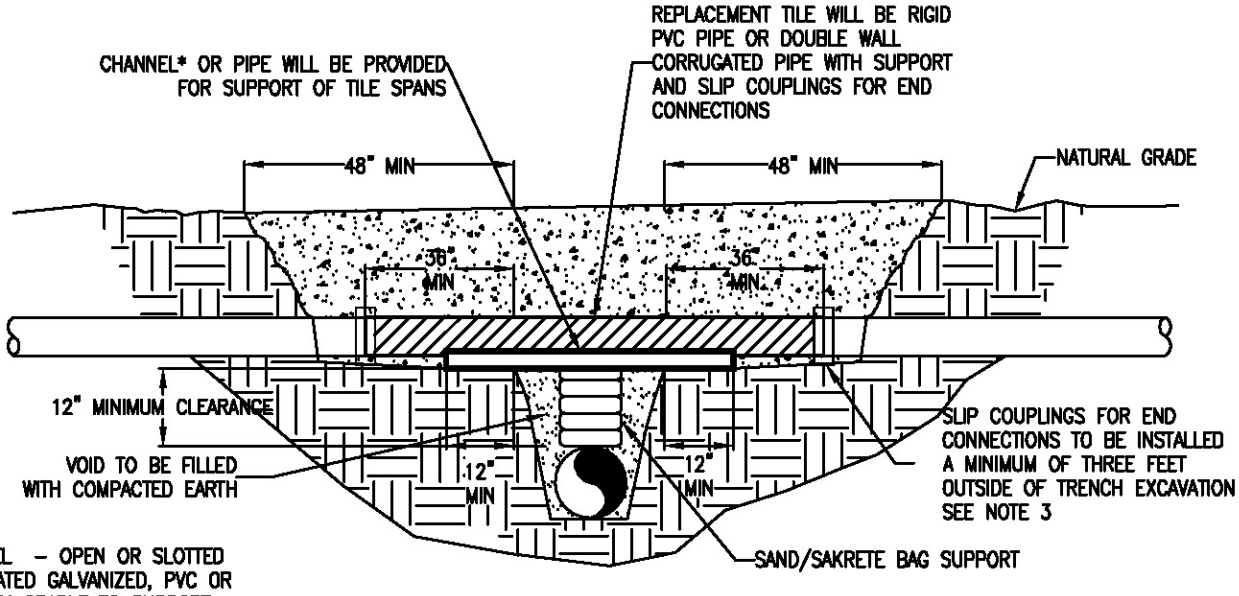

*CHANNEL – OPEN OR SLOTTED CORRUGATED GALVANIZED, PVC OR ALUMINUM CRADLE TO SUPPORT DRAIN TILE.

CROSS SECTION
N.T.S.

NOTE:

1. IMMEDIATELY REPAIR TILE IF WATER IS FLOWING THROUGH TILE AT TIME OF TRENCHING. IF NO WATER IS FLOWING AND TEMPORARY REPAIR IS DELAYED, OR NOT MADE BY THE END OF THE WORK DAY, A SCREEN OR APPROPRIATE 'NIGHT CAP' SHALL BE PLACED ON OPEN ENDS OF TILE TO PREVENT ENTRAPMENT OF ANIMALS ETC.
2. CHANNEL OR PIPE (OPEN OR SLOTTED) MADE OF CORRUGATED GALVANIZED PIPE, PVC OR ALUMINUM WILL BE USED FOR SUPPORT OF DRAIN TILE SPANS.
3. INDUSTRY STANDARDS SHALL BE FOLLOWED TO ENSURE PROPER SEAL OF REPAIRED DRAIN TILES.

TEMPORARY DRAIN TILE REPAIR

FIGURE 2.

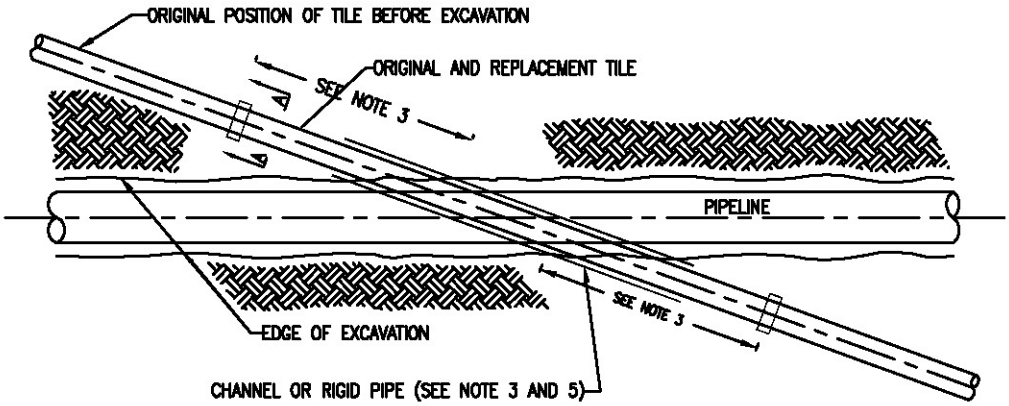

PLAN VIEW

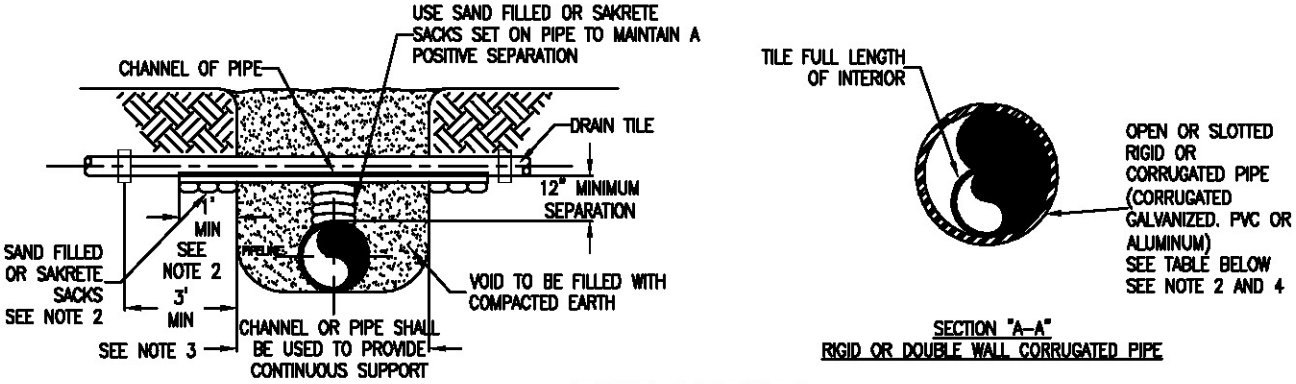

END VIEWS

MINIMUM SUPPORT TABLE				
TILE SIZE	CHANNEL SIZE		PIPE SIZE	
3"	4" @ 5.4	#/ft	4"	STD. WT.
4"-5"	5" @ 6.7	#/ft	6"	STD. WT.
8"-9"	7" @ 9.8	#/ft	9"-10"	STD. WT.
10"	10" @ 15.3	#/ft	12"	STD. WT.

NOTE:

1. TILE REPAIR AND REPLACEMENT SHALL MAINTAIN ORIGINAL ALIGNMENT GRADIENT AND WATER FLOW TO THE GREATEST EXTENT POSSIBLE. IF THE TILE NEEDS TO BE RELOCATED, THE INSTALLATION ANGLE MAY VARY DUE TO SITE SPECIFIC CONDITIONS AND LANDOWNER RECOMMENDATIONS.

2. 1'–0" MINIMUM LENGTH OF CHANNEL OR RIGID PIPE (OPEN OR SLOTTED CORRUGATED GALVANIZED. PVC OR ALUMINUM CRADLE) SHALL BE SUPPORTED BY UNDISTURBED SOIL, OR IF CROSSING IS NOT AT RIGHT ANGLES TO PIPELINE, EQUIVALENT LENGTH PERPENDICULAR TO TRENCH. SHIM WITH SAKRETE, OR SAND BAGS TO UNDISTURBED SOIL FOR SUPPORT AND DRAINAGE GRADIENT MAINTENANCE (TYPICAL BOTH SIDES).

3. DRAIN TILES WILL BE PERMANENTLY CONNECTED TO EXISTING DRAIN TILES A MINIMUM OF THREE FEET OUTSIDE OF EXCAVATED TRENCH LINE USING INDUSTRY STANDARDS TO ENSURE PROPER SEAL OF REPAIRED DRAIN TILES INCLUDING SLIP COUPLINGS.

4. DIAMETER OF RIGID PIPE SHALL BE OF ADEQUATE SIZE TO ALLOW FOR THE INSTALLATION OF THE TILE FOR THE FULL LENGTH OF THE RIGID PIPE.

5. OTHER METHODS OF SUPPORTING DRAIN TILE MAY BE USED IF ALTERNATE PROPOSED IS EQUIVALENT IN STRENGTH TO THE CHANNEL/PIPE SECTIONS SHOWN AND IF APPROVED BY COMPANY REPRESENTATIVES AND LANDOWNER IN ADVANCE. SITE SPECIFIC ALTERNATE SUPPORT SYSTEM TO BE DEVELOPED BY COMPANY REPRESENTATIVES AND FURNISHED TO CONTRACTOR FOR SPANS IN EXCESS OF 20', TILE GREATER THEN 10" DIAMETER, AND FOR "HEADER" SYSTEMS.

6. ALL MATERIAL TO BE FURNISHED BY CONTRACTOR.

7. PRIOR TO REPAIRING TILE, CONTRACTOR SHALL PROBE LATERALLY INTO THE EXISTING TILE TO FULL WIDTH OF THE RIGHTS OF WAY TO DETERMINE IF ADDITIONAL DAMAGE HAS OCCURRED. ALL DAMAGED/DISTURBED TILE SHALL BE REPAIRED AS NEAR AS PRACTICABLE TO ITS ORIGINAL OR BETTER CONDITION.

PERMANENT DRAIN TILE REPAIR

ILLINOIS DEPARTMENT OF AGRICULTURE

Justification for
Five Feet of Topcover Above Underground Pipelines

Increases Safety

Deep tillage is a common method farmers utilize to alleviate compaction and break up the hard pan that sometimes develops below the plow zone (8"-12" deep). Deep tillage implements are often operated up to 16" deep. Over the ± 50-year life span of a pipeline, even minor sheet erosion could significantly reduce the amount of soil above the pipeline where it is located on sloping land. If this occurred, a deep tillage implement could strike the pipeline. Such an accident may result in the loss of life to the farm equipment operator and/or the evacuation of residents downwind from the ruptured pipeline.

Even if deep tillage is not an issue, 5 feet (60 inches) of top cover provides an extra margin of safety for:

- installation of new tile drainage systems
- construction of shallow drainage ditches
- excavation of grassed waterways, terraces, diversions, and other conservation practices
- land leveling
- setting fence posts
- carrying out other land improvements that may require minor excavations of the soil surface.

Landowners are responsible for contacting the pipeline company and/or JULIE before conducting any of these activities on the pipeline right-of-way; however, accidents and mistakes do occur. Extra top cover above the pipeline will provide an extra margin of safety to all involved.

Permits Optimum Efficiency of New Tiling Systems

Many of the soils in the state are, by nature, poorly drained. To facilitate proper drainage, landowners install tile drainage systems. The removal of excess water is essential for proper plant growth and is a major contributor to the productive capability of Illinois farmland. Without proper drainage, most of the other methods commonly used to boost crop production (fertilization, pesticides, better seed varieties, improvements in farm machinery) would be less effective.

In order for tiling systems to work at their peak efficiency, they must be placed at an optimum depth, usually between 30" to 48" depending upon the soils being tiled. Placement of a pipeline from 30" to 48" deep could interfere with new tiling systems on land that has never been tiled or where older, shallower systems are replaced. If a tiling system cannot be placed at its optimum depth, the economic return on this capital investment by the landowner may be reduced, thereby placing an additional financial burden on the landowner.

Provides Additional Flexibility in Meeting the Requirements of Soil Erosion Regulations

The State of Illinois currently has regulations (70 ILCS 405/1 et seq.) relating to the control of excessive erosion occurring on agricultural land. Compliance with the regulations is voluntary; however, growing concerns over groundwater and surface water contamination by agricultural

chemicals, as well as concerns regarding the sedimentation of water supply reservoirs, are moving the agricultural community closer and closer to mandatory erosion control. Common practices used by landowners to control excessive erosion on cropland include the construction of grassed waterways and terraces. Both require cuts in the grade of the field surface to construct the practices. Both are also commonly drained by underground tiling systems.

If a pipeline is buried 30" to 48" deep in a location where it is necessary to construct a terrace or grassed waterway to control excessive erosion, the depth of the pipeline could prevent the proper conservation practice to control the erosion.

Such a scenario could make it difficult, if not impossible, for a landowner to comply with voluntary or mandatory erosion control regulations. Non-compliance with mandatory regulations could invoke monetary penalties upon the landowner and/or force the landowner to retire a field from crop production.

Alternatives to the use of grassed waterways and terraces may dictate the use of different cropping practices for which the landowner may need to purchase additional equipment. In a worse case scenario, the landowner may have no alternative, but to sell the land across which a pipeline was constructed at too shallow of a depth.

Provides Additional Flexibility in Meeting the Requirements of USDA Farm Bills

The 1985, 1990, and 1996 Farm Bills passed by Congress require all landowners who farm highly erodible land to control excessive soil erosion on <u>all</u> land they own or manage, or risk losing their USDA farm benefits.

For reasons previously stated, if a pipeline prevents a landowner from constructing conservation practices that are necessary for the control of excessive erosion on any <u>portion</u> of the landowner's farm, it may complicate or prevent the landowner from participating in the USDA farm programs. There are a number of ways to control erosion on sloping farmland beyond the construction of terraces and waterways, but the alternatives may require the purchase of different equipment or may require crop rotations that would not fit in with the landowner's overall farm plan. This could have a major financial impact on the landowner.

Provides Additional Flexibility in Accommodating Unforeseen Technological Improvements in Agriculture

No one can predict what the future will hold for agriculture in the ± 50-year life span of the pipeline. Underground irrigation may increase. Deeper tillage may become more prevalent. It may become economically advantageous to tile soils that are not tiled today. Marginal land with special needs may be brought into production to meet world demands for food, fiber, energy, etc. If the pipeline is buried too shallow, it may limit or prevent farmers from taking advantage of new technology.